Model No. 02.7016-7052
LED Arrow Board
with 02.7066 Control Box

Installation and Maintenance Instructions

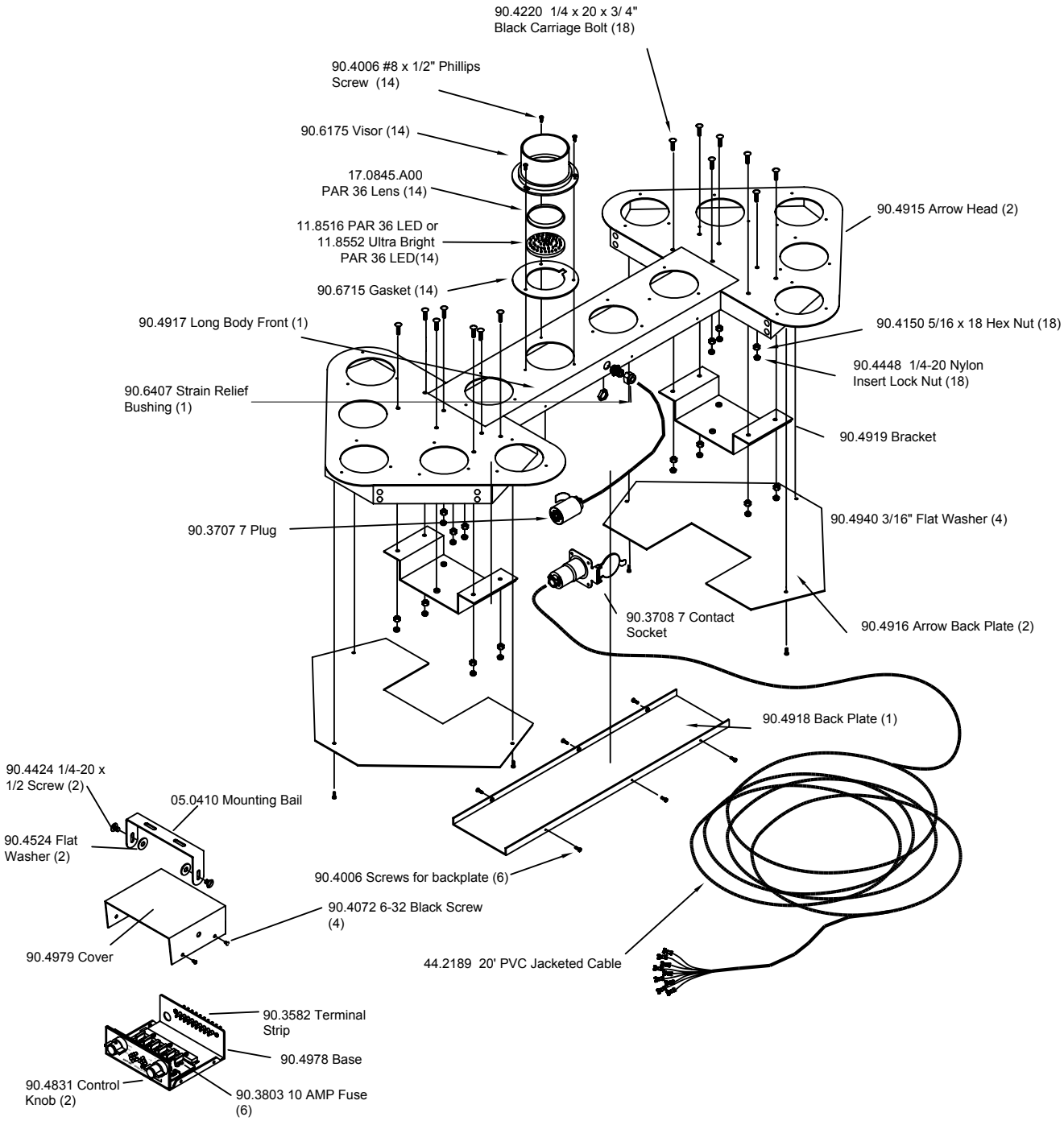

PRODUCTS COMPANY ***804 East Hwy 248 Cassville, MO 65625***

U.S. and Canada Toll Free Numbers Phone: *800-641-4098* ***FAX:*** *800-526-1240*

E-mail: *sales@able2products.com* ***WEB:*** *www.able2products.com*

Installation Instructions

All connections are external. There is no need to open the control box during the installation process.

1. Mount the **SHO-ME**® Directional Arrow Board on the vehicle as desired.
2. Route the cable from the Arrow Board to the driver's compartment and connect to the terminals of the control box as shown on page 3.
3. Connect the bare end of the RED Power lead to a +12 volt DC Power source and connect the BLACK wire to ground (these wires come pre-wired to the control box).
4. Make sure that the spade connectors on the cable and the terminal strip on the back of the control box match color with name.
5. A mounting bracket is provided for easy installation of the control box. Determine a suitable position for the mounting bracket and attach it to the vehicle with appropriate fasteners (not included). Then attach the control box to the mounting bracket with the bolts and washers provided.

MAINTENANCE INSTRUCTIONS

TROUBLE SHOOTING

1. If the **SHO-ME**® Directional Arrow Board is not operating properly or is not lighting to full brilliance, make sure all wire connections made during the installation process are secure and the power source is active. Take particular care in making certain that ground connections are properly made.
2. If the Arrow Board is still not working, check the internal fuses, inside the control box.

Wiring for 02.7016/ 7052 LED Arrow Boards
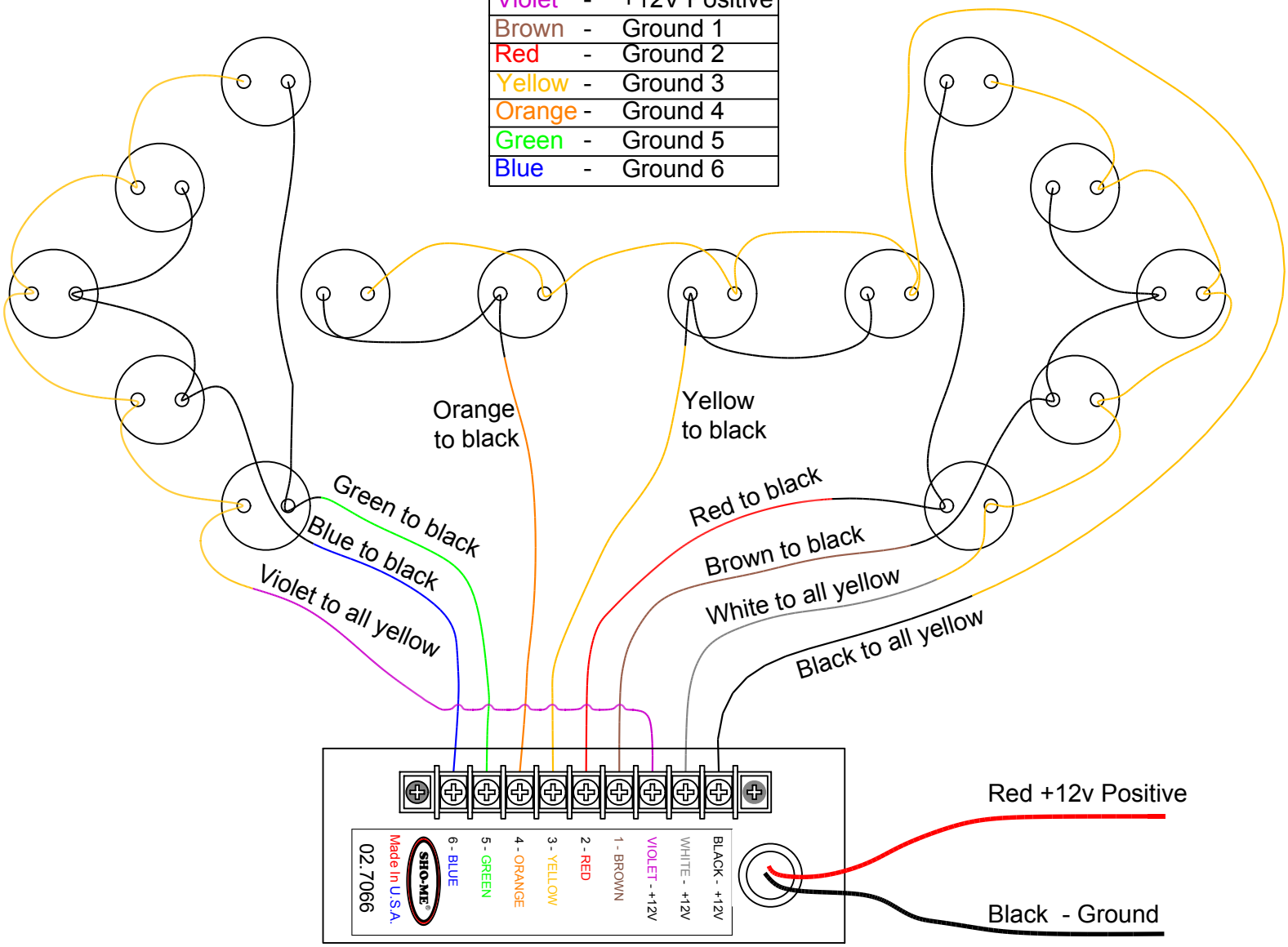
Black	-	+12V Positive
White	-	+12V Positive
Violet	-	+12V Positive
Brown	-	Ground 1
Red	-	Ground 2
Yellow	-	Ground 3
Orange	-	Ground 4
Green	-	Ground 5
Blue	-	Ground 6